Revision Notes.				
R1 - NOTES UPDATED TO INCLUDE LABEL DETAILS, STANDARDS UPDATED AS PER ECR CR-A274.				
APA: K.IIDA	Drawn:R.BATES	Checked:M.BUTLER	Approved:G.PLITH	Date: 28/08/14

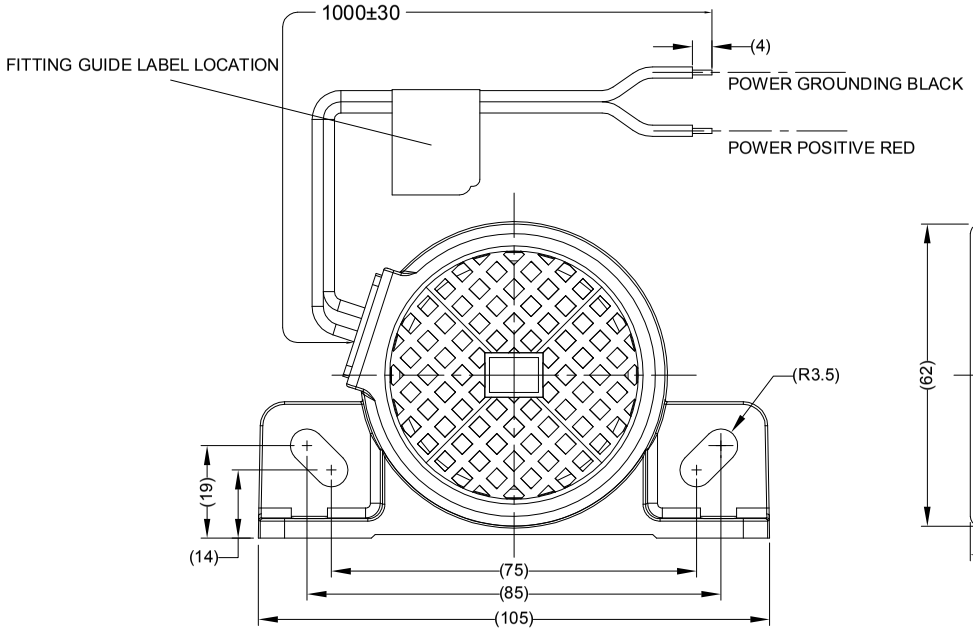

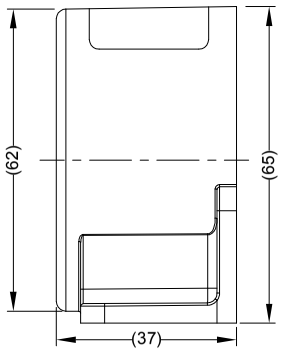

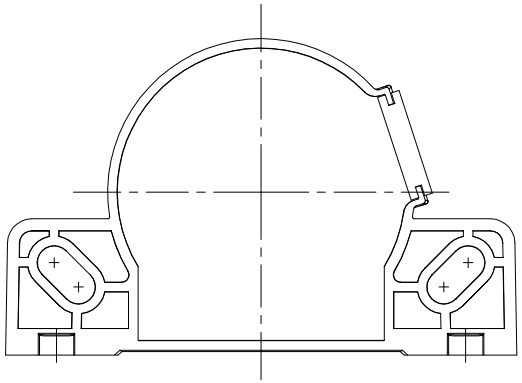

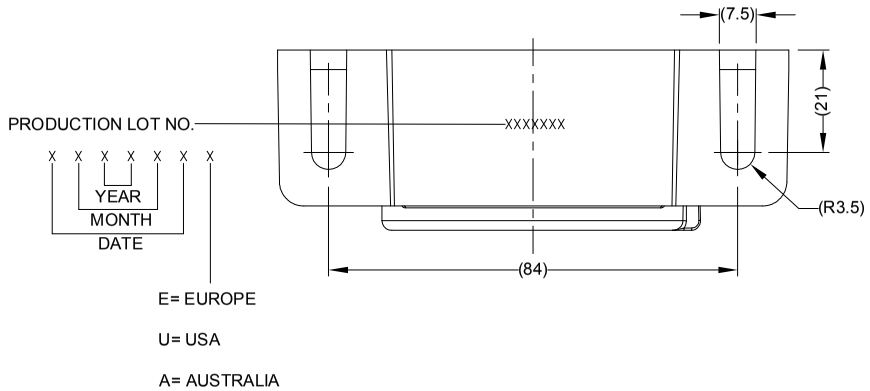

SPECIFICATION:

1. RATED VOLTAGE: 12 AND 24 VOLT DIRECT CURRENT (WORKING VOLTAGE RANGE 9~32 VOLTS)
2 .RATED CURRENT: 0.2 AMPERES OR LESS.
3. SOUND PRESSURE: 92±4 DECIBELS AT TEST VOLTAGE OF 14 AND 28 VOLTS (AS MEASURED AT DISTANCE OF 1.2M AND AT HEIGHT OF 1.2M ABOVE THE GROUND)
4. INTERMITTENCE: 80±10 CYCLES PER MINUTE AT TEST VOLTAGE OF 14 AND 28 VOLTS.
5. TONE: WHITE SOUND(BBS).
6. ENVIRONMENTAL: SUBJECT TO SAE J994.

NOTES:
1. FOR PRODUCT LABEL REFER TO LATEST REVISION OF DRAWING BE-002833-XX-14.
2. FOR GIFTBOX LABEL REFER TO LATEST REVISION OF DRAWING BE-002834-XX-14.
3. "R TRIANGLE" INDICATES CHANGES MADE TO REVISION OF DRAWING AS IDENTIFIED IN REVISION NOTES. R1

PROPRIETARY NOTICE
THIS DESIGN AND TECHNICAL INFORMATION APPEARING ON THIS DRAWING IS THE PROPERTY OF BRIGADE ELECTRONICS, AND IS DISCLOSED IN CONFIDENCE. IT IS NOT TO BE COPIED, REPRODUCED, REVEALED TO OR EXPROPRIATED BY OTHERS, EITHER IN WHOLE OR IN PART WITHOUT THE EXPRESS WRITTEN CONSENT OF BRIGADE ELECTRONICS.

BRIGADE®
www.brigade-electronics.com

Assembly Pl Approval	Approved by	Checked by	Drawn by
K.IIDA - 26/02/13	S.MATTHEWS	G.PLITH	R.BATES

Angle of Projection	Units	Scale	Released	Assembly Ref
Third Angle	mm	N/A	27/02/13	-

Status	
RELEASED	BBS-92
Part No 0934B	BE-002320-01-13

FrameV3